Van de Lande

# 3.71 Verschraubung

## Produktinformationen

**Eigenschaften**
- Konisch Rohr- Aussengewinde

**Material**
- PVC-U = Polyvinylchlorid ohne Weichmacher

**Dichtungen**
- EPDM

**Herstellung**
- Spritzguss



## Zubehör



8.25 Bundbuchse | 8.22 Gewindestück | 8.20 Überwurf mutter für Spritzgussverschaubung | 8.06 O-ring für Verschraubung | 8.36 O-ring für Verschraubung

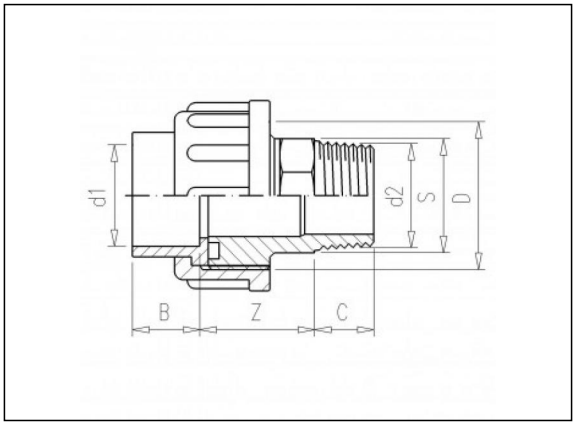


## Verfügbare Artikel

| ART.CODE | d1 | d2 | Z | B | C | D | S | PN | Verp |
|---|---|---|---|---|---|---|---|---|---|
| 3.70.075 | 2 1/2 | 2 1/2" (M) | 56 | 44 | 34 | ZGTD | 94 | 10 | 25 |
| 3.71.020 | 1/2 | 1/2" (M) | 31 | 17 | 17 | 1" | 28 | 16 | 100 |
| 3.71.025 | 3/4 | 3/4" (M) | 33 | 20 | 17 | 1 1/4" | 32 | 16 | 60 |
| 3.71.032 | 1 | 1" (M) | 34 | 23 | 22 | 1 1/2" | 38 | 16 | 100 |

**Van de Lande BV**
Lissenveld 1 \ 4941 VK Raamsdonksveer \ The Netherlands \ t +31 (0)162 51 60 00 \ f +31 (0)162 52 14 17 \ sales@vandelande.com
Traderegister Tilburg: 18070844 \ IBAN: NL13 RABO 0143 0035 26 \ BIC: RABONL2U \ VAT:NL 8123.91.755.B01

www.vandelande.com

All our transactions are subject to the Van de Lande General Terms of Sale. A copy of these can be provided immediately upon your request.

Van de Lande

| ART.CODE | d1 | d2 | Z | B | C | D | S | PN | Verp |
|---|---|---|---|---|---|---|---|---|---|
| 3.71.040 | 1 1/4 | 1 1/4" (M) | 38 | 28 | 24 | 2" | 46 | 16 | 80 |
| 3.71.050 | 1 1/2 | 1 1/2" (M) | 42 | 30 | 24 | 2 1/4" | 55 | 16 | 60 |
| 3.71.063 | 2 | 2" (M) | 46 | 36 | 28 | 2 3/4" | 65 | 16 | 45 |
| 3.71.090 | 3 | 3" (M) | 68 | 51 | 37 | ZGTD | 114 | 10 | 10 |
| 3.71.110 | 4 | 4" (M) | 74 | 63 | 43 | ZGTD | 138 | 10 | 10 |

**Van de Lande BV**
Lissenveld 1 \ 4941 VK Raamsdonksveer \ The Netherlands \ t +31 (0)162 51 60 00 \ f +31 (0)162 52 14 17 \ sales@vandelande.com
Traderegister Tilburg: 18070844 \ IBAN: NL13 RABO 0143 0035 26 \ BIC: RABONL2U \ VAT:NL 8123.91.755.B01

www.vandelande.com

All our transactions are subject to the Van de Lande General Terms of Sale. A copy of these can be provided immediately upon your request.