Van de Lande

3.69 Verschraubung mit O-Ring

Produktinformationen

Eigenschaften
- Geradem Rohr Aussengewinde

Material
- PVC-U = Polyvinylchlorid ohne Weichmacher

Dichtungen
- EPDM

Herstellung
- Spritzguss



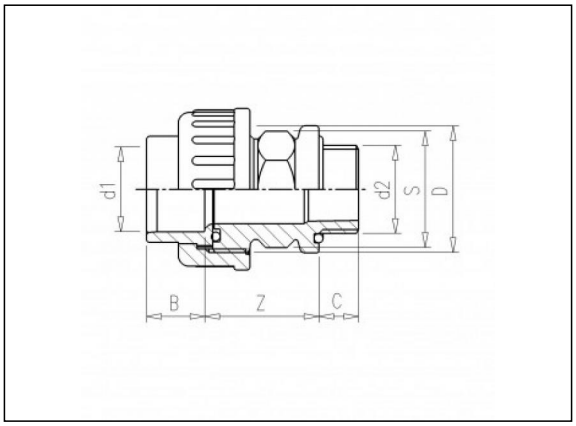

Verfügbare Artikel

ART.CODE	d1	d2	Z	B	C	D	S	PN	Verp
3.69.022	1/2	1/2"(M)	39	17	10	1"	28	10	50
3.69.027	3/4	3/4"(M)	41	20	12	1 1/4"	32	10	60
3.69.034	1	1"(M)	44	23	15	1 1/2"	38	10	100
3.69.042	1 1/4	1 1/4"(M)	49	28	15	2"	46	10	50

Van de Lande BV
Lissenveld 1 \ 4941 VK Raamsdonksveer \ The Netherlands \ t +31 (0)162 51 60 00 \ f +31 (0)162 52 14 17 \ sales@vandelande.com
Traderegister Tilburg: 18070844 \ IBAN: NL13 RABO 0143 0035 26 \ BIC: RABONL2U \ VAT:NL 8123.91.755.B01

www.vandelande.com

All our transactions are subject to the Van de Lande General Terms of Sale. A copy of these can be provided immediately upon your request.

Van de Lande

ART.CODE	d1	d2	Z	B	C	D	S	PN	Verp
3.69.052	1 1/2	1 1/2"(M)	56	30	18	2 1/4"	55	10	50
3.69.053	1 1/2	2"(M)	56	30	23.5	2 1/4"	55	10	25
3.69.065	2	2"(M)	58	36	23.5	2 3/4"	65	10	25

Van de Lande BV
Lissenveld 1 \ 4941 VK Raamsdonksveer \ The Netherlands \ t +31 (0)162 51 60 00 \ f +31 (0)162 52 14 17 \ sales@vandelande.com
Traderegister Tilburg: 18070844 \ IBAN: NL13 RABO 0143 0035 26 \ BIC: RABONL2U \ VAT:NL 8123.91.755.B01

All our transactions are subject to the Van de Lande General Terms of Sale. A copy of these can be provided immediately upon your request.