Van de Lande

# 3.66 Verschraubung

## Produktinformationen

**Eigenschaften**
- Rohr Innengewinde
- Edelstahl

**Material**
- PVC-U = Polyvinylchlorid ohne Weichmacher

**Dichtungen**
- EPDM

**Herstellung**
- Spritzguss



## Zubehör



8.25 Bundbuchse | 8.22 Gewindestück | 8.20 Überwurf mutter für Spritzgussverschaubung | 8.06 O-ring für Verschraubung | 8.36 O-ring für Verschraubung

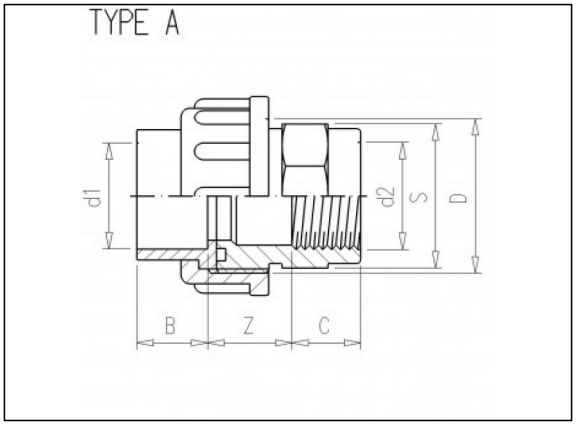


## Verfügbare Artikel

| ART.CODE | d1 | d2 | Z | B | C | D | S | Type | PN | Verp |
|---|---|---|---|---|---|---|---|---|---|---|
| 3.65.075 | 2 1/2 | 2 1/2" (F) | 41 | 44 | 30 | ZGTD | 94 | B | 10 | 10 |
| 3.66.020 | 1/2 | 1/2" (F) | 24 | 17 | 16 | 1" | 30 | A | 10 | 100 |
| 3.66.021 | 1/2 | 1/2" (F) | 24 | 17 | 16 | 1" | 30 | B | 16 | 100 |
| 3.66.025 | 3/4 | 3/4" (F) | 24 | 20 | 17 | 1 1/4" | 36 | A | 10 | 60 |
| 3.66.026 | 3/4 | 3/4" (F) | 24 | 20 | 17 | 1 1/4" | 36 | B | 16 | 60 |

**Van de Lande BV**
Lissenveld 1 \ 4941 VK Raamsdonksveer \ The Netherlands \ t +31 (0)162 51 60 00 \ f +31 (0)162 52 14 17 \ sales@vandelande.com
Traderegister Tilburg: 18070844 \ IBAN: NL13 RABO 0143 0035 26 \ BIC: RABONL2U \ VAT:NL 8123.91.755.B01



All our transactions are subject to the Van de Lande General Terms of Sale. A copy of these can be provided immediately upon your request.

Van de Lande

| ART.CODE | d1 | d2 | Z | B | C | D | S | Type | PN | Verp |
|---|---|---|---|---|---|---|---|---|---|---|
| 3.66.032 | 1 | 1" (F) | 24 | 23 | 21 | 1 1/2" | 44 | A | 10 | 100 |
| 3.66.033 | 1 | 1" (F) | 24 | 23 | 21 | 1 1/2" | 44 | B | 16 | 100 |
| 3.66.040 | 1 1/4 | 1 1/4" (F) | 24 | 28 | 23 | 2" | 54 | A | 10 | 80 |
| 3.66.041 | 1 1/4" | 1 1/4" (F) | 24 | 28 | 23 | 2" | 54 | B | 16 | 80 |
| 3.66.050 | 1 1/2 | 1 1/2" (F) | 32 | 30 | 23 | 2 1/4" | 64 | A | 10 | 60 |
| 3.66.051 | 1 1/2 | 1 1/2" (F) | 32 | 30 | 23 | 2 1/4" | 64 | B | 16 | 60 |
| 3.66.063 | 2 | 2" (F) | 33 | 36 | 27 | 2 3/4" | 80 | A | 10 | 50 |
| 3.66.064 | 2 | 2" (F) | 33 | 36 | 27 | 2 3/4" | 80 | B | 16 | 50 |
| 3.66.090 | 3 | 3" (F) | 51 | 63 | 39 | ZGTD | 114 | B | 10 | 10 |
| 3.66.110 | 4 | 4" (F) | 56 | 64 | 41 | ZGTD | 138 | B | 10 | 10 |

**Van de Lande BV**
Lissenveld 1 \ 4941 VK Raamsdonksveer \ The Netherlands \ t +31 (0)162 51 60 00 \ f +31 (0)162 52 14 17 \ sales@vandelande.com
Traderegister Tilburg: 18070844 \ IBAN: NL13 RABO 0143 0035 26 \ BIC: RABONL2U \ VAT:NL 8123.91.755.B01



All our transactions are subject to the Van de Lande General Terms of Sale. A copy of these can be provided immediately upon your request.